ZENIT

better together

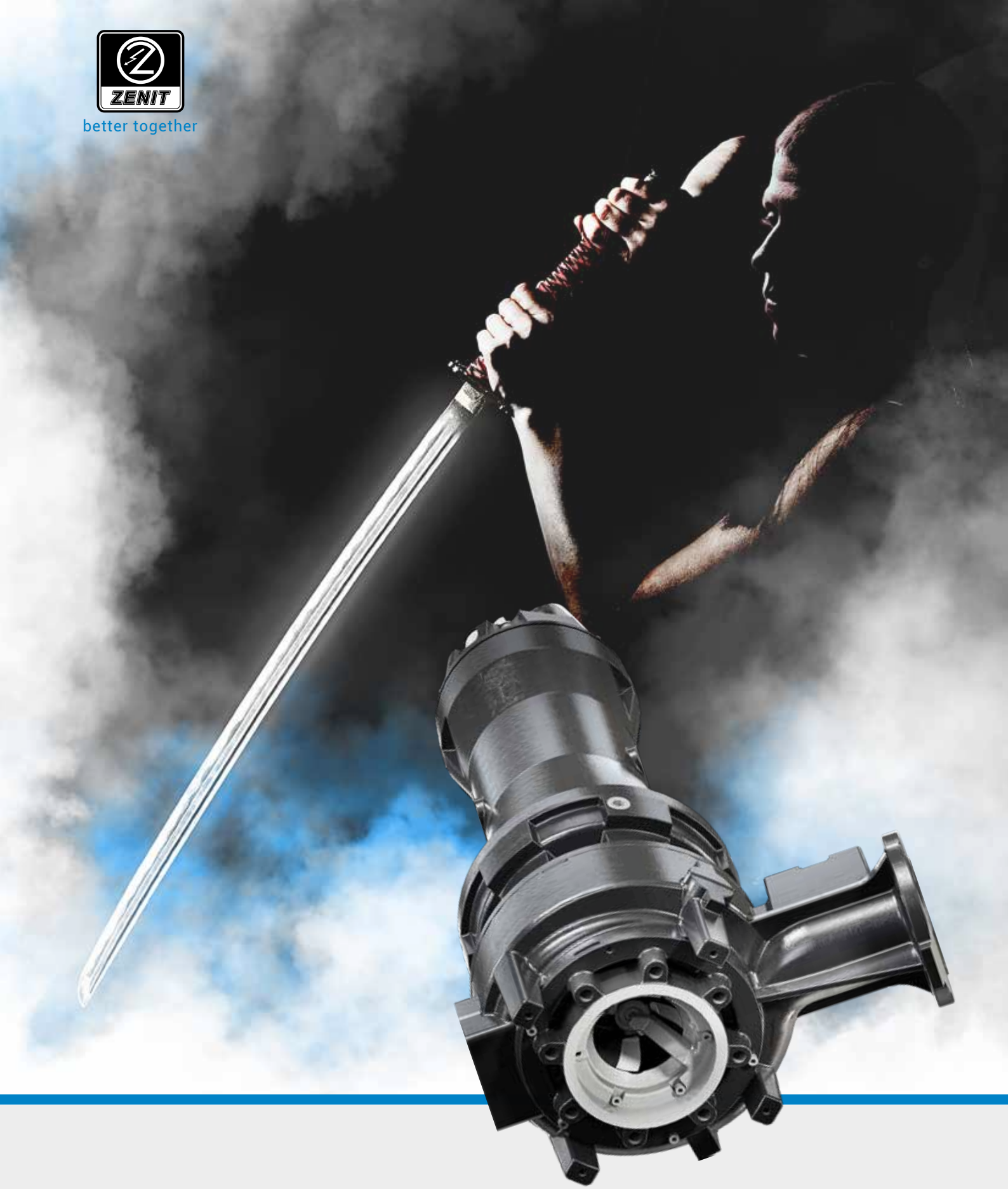

HIGH-EFFICIENCY
SUBMERSIBLE ELECTRIC PUMPS
WITH CUTTING SYSTEM

CHOPPER

UNIQA®

zenit.com

EN

Chopper Series

The ultimate solution to clogging problems of pumps and pipes in solid waste sewage lifting plants

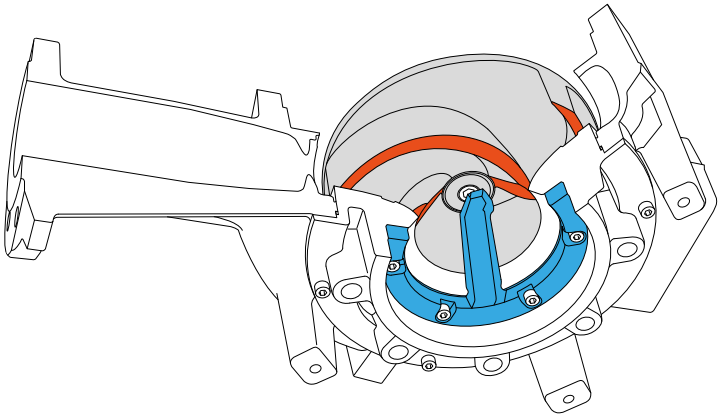

In wastewater treatment plants, more often than not, a **high amount solid waste**, even of large size, tends to build up inside the collection tanks, potentially **blocking the impeller** and **clogging up the pipes** making the lifting station almost ineffective.

When this occurs at a time when there is a large influx of water into the tank, the blocking of the pump become a serious issue that can lead to overflowing and compromise safety.

The use of filtering grids is not an effective solution because, in the presence of heavily loaded water, **constant monitoring** and **frequent removal** of the collected solid waste is needed.

The necessary periodic cleaning requires the intervention of specialised personnel and shutting down the system for the entire duration of the operations, with consequent increase in running costs.

The different nature of the **waste** present, which is fibrous but also contains plastic and metal, does not allow the use of normal shredding pumps because of their **small free passage**.

Furthermore, the limited flow rate that generally characterizes these models means that it takes a long time to empty the tank to the safety threshold.

The Zenit solution

ZUG CP models with high-efficiency motors and hydraulic "Chopper" can expel any solid shreddable body present in the wastewater by exploiting an effective cutting system

The heart of the system consists of a robust **steel knife** with a sharp edge, skimming the blades of the **channel impeller** for cutting solid bodies of any shape and material.
This prevents the impeller from blocking, but also avoids the build-up of residues in the pipe ensuring smooth operation of the system.

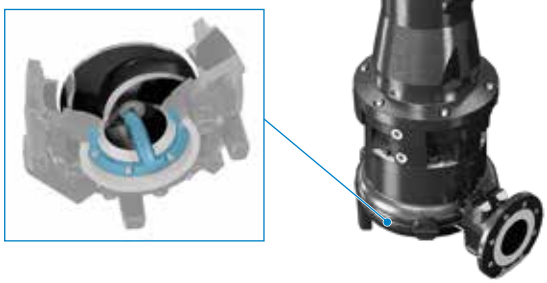

The three key factors

The **components** are designed using special three-dimensional fluid-dynamic modelling software.

Use of **innovative materials** which guarantee high resistance to mechanical stress and wear

High-performance hydraulics to secure the best operation even in the toughest working conditions

A versatile range

The implemented constructive specifications and technical solutions make the **UNIQA Chopper** perfect for a wide range of civil and industrial applications

- Heavy-duty applications in civil wastewater treatment plants
- Pumping stations for wastewater containing solids
- Sewerage lifting systems

- Farms and livestock farm lifting systems
- Meat processing industry
- Fishing and canning industry

- Pulp and paper mill lifting systems
- Water recirculation in the textile and tanning industry
- Pumping of wastewater in industrial processes in general

ZENO NAVIGATOR SUITE

The **ZENO Pump Selector** is a valid tool for finding and configuring electric pumps helping you to pinpoint the product that corresponds to your search parameters quickly. Products can be selected by point of operation or by choosing the hydraulic type directly.

How it is made

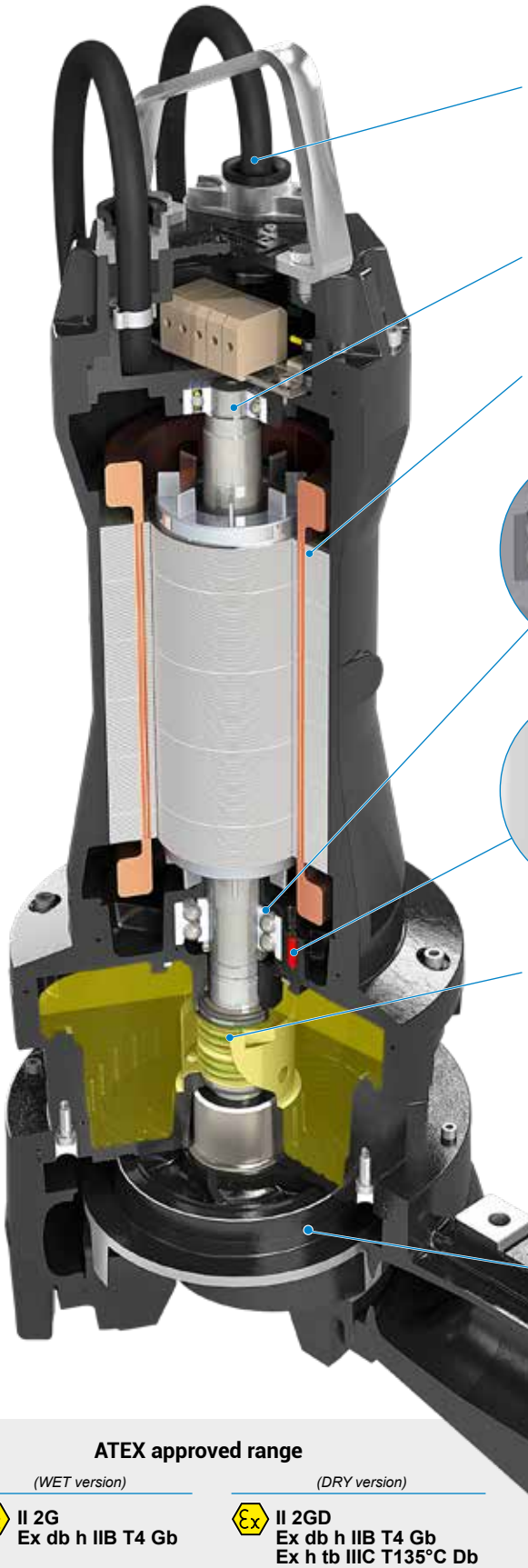

The universal GAS thread of the **cable gland** allows the attachment of a protective tube to reduce chemical and mechanical stresses on the electrical cable caused by turbulence or the aggressive nature of the liquid.

Drive shaft made of AISI 431 steel with impeller coupling by means of a conical joint and skimming adjustment system.

Class H motor and PREMIUM IE3 efficiency guaranteeing high performance and excellent energy efficiency.

Oversized **bearings** to ensure 100,000 hours of work.

One or more **probes** can be installed inside the motor, terminal box or oil chamber to signal the presence of water or moisture.
Bearing vibration and temperature sensors.

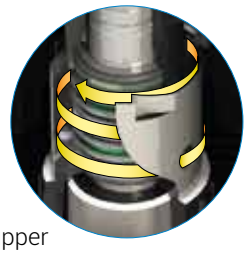

Two mechanical seals made of silicon carbide (SiC-SiC) in large oil chamber.
The mechanical seals are never in contact with any solid or filaments contained in the wastewater.

Thanks to a special component *(oil lifter)* the upper mechanical seal remains lubricated at all times, with more effective protection against wear

Standard **chopper impeller** made of *hard cast iron* with solid body shredding system.
Hydraulic efficiency only -3/5%
compared to a normal channel impeller

ATEX approved range

(WET version)	*(DRY version)*
II 2G **Ex db h IIB T4 Gb**	**II 2GD** **Ex db h IIB T4 Gb** **Ex h tb IIIC T135°C Db**

No-Lock cutting system

The innovative *No-Lock* system allows the cutting of shreddable solid bodies present in the waste-water, avoiding potential blockage.

Each chopper model is equipped with high-efficiency hydraulics which includes:

- **CHANNEL IMPELLER**

With sharp-edged blades made of a new material we call ***Hard cast iron***, which is stronger than the commonly used grey cast iron, with a hardness between 450 and 500 HB.
Its composition is particularly complex and derives from the chemical union of several substances in precise proportions.

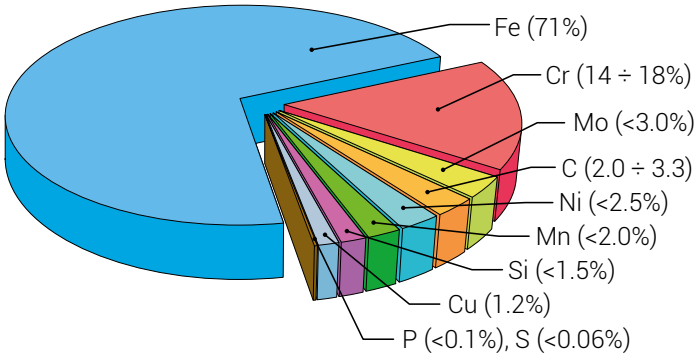

Name	**ASTM A532**
Class	**II**
Type	**B**
Designation	**15% Cr-Mo**

- **CUTTING SYSTEM**

Formed by a knife skimming the impeller blades, made of AISI 431 steel.
This material has a carbon content of about 0.12-0.22%. It is an excellent stainless steel with a hardness value of about 300 HB and a high shear strength.

In this configuration, the pump can **cut the solids and filaments** present in the effluent preventing potential **blockage** or clogging and is particularly resistant to the **corrosion**.

Read the QR-code and watch the cutting test!

Cooling system

In **DRY version** models, the motor is cooled by a water and glycol mixture which circulates in a special closed circuit.

The coolant mixture is recirculated inside the pump by an **axial impeller** integral with the shaft and to the special design of the **double steel jacket** which ensures the necessary heat exchange between motor and external environment.

The continuous operation **(service class S1)** of the pump is also guaranteed in dry installations, in partially submerged conditions and in high-temperature environments.

Performance

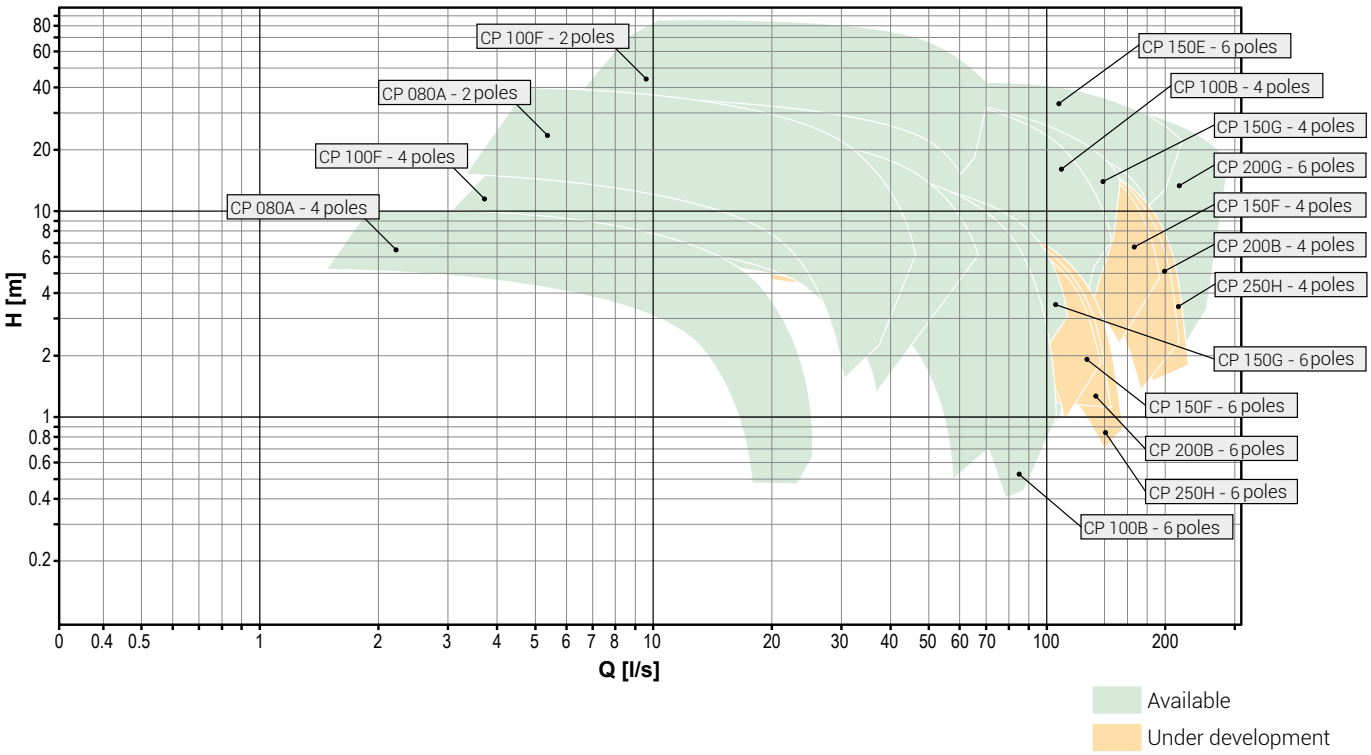

Specifications

50 and 60Hz versions
Thermal protections integrated in the stator
Long-life bearings (up to 100,000 hours)
Leakage monitoring system in sealed compartment (standard) and motor (optional)
Two silicon carbide mechanical seals in large oil chamber
Closed jacket cooling system with internal recirculation

Specifications of use

Max. working temperature	40°C (60°C on request)
Liquid pH	6 - 14
Liquid viscosity	1 mm²/s
Liquid density	1 kg/dm³
Max. sound pressure level	<70 dB
Max. immersion depth	20 m
Max. start-ups per hour	20 [<10 kW] / 15 [>10kW]

Materials

Motor casing	EN-GJL-250 cast iron
Impeller	Hard cast iron
Mechanical seals	2 made of silicon carbide (2SiC)
Screws	Stainless steel - Class A2-70
Standard gasket	Rubber - NBR
Drive shaft	Stainless steel - AISI 431
Cutter	Stainless steel - AISI 431
Painting	High-corrosion-resistant two-component epoxy

Electrical and hydraulic data

ZUG CP 080A

2 poles

Power (kW)	4 - 11
Delivery	DN80
Suction	DN80
Max. flow rate (l/s)	45
Max. head (m)	39.2

4 poles

Power (kW)	1.1 - 1.5
Delivery	DN80
Suction	DN80
Max. flow rate (l/s)	25
Max. head (m)	10

ZUG CP 100B

4 poles

Power (kW)	11 - 45
Delivery	DN100
Suction	DN150
Max. flow rate (l/s)	142
Max. head (m)	40.2

6 poles

Power (kW)	4 - 13
Delivery	DN100
Suction	DN150
Max. flow rate (l/s)	100.6
Max. head (m)	18.7

ZUG CP 100F

2 poles

Power (kW)	22 - 45
Delivery	DN100
Suction	DN150
Max. flow rate (l/s)	70.1
Max. head (m)	82.7

4 poles

Power (kW)	3 - 15
Delivery	DN100
Suction	DN150
Max. flow rate (l/s)	65.4
Max. head (m)	25.7

ZUG CP 150E

6 poles

Power (kW)	45 - 75
Delivery	DN150
Suction	DN200
Max. flow rate (l/s)	215.2
Max. head (m)	41.3

ZUG CP 150G

4 poles

Power (kW)	11 - 45
Delivery	DN150
Suction	DN150
Max. flow rate (l/s)	149.5
Max. head (m)	38.9

6 poles

Power (kW)	4 - 13
Delivery	DN150
Suction	DN150
Max. flow rate (l/s)	109.7
Max. head (m)	18.0

ZUG CP 200G

6 poles

Power (kW)	22 - 75
Delivery	DN200
Suction	DN200
Max. flow rate (l/s)	281.2
Max. head (m)	40.0

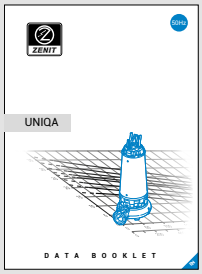

Data Booklet

The technical data and hydraulic performances of the main **UNIQA** models are provided in the relative **Data Booklet** available for download from the website.

www.zenit.com

better together

The digital version of this catalogue is available for download at: www.zenit.com

The data provided are not binding.
Zenit reserves the right to modify the product without advance notification.

For further information, visit www.zenit.com

Cod. 290400015
Rev. 1 - 01/01/2023